REV.	DATE	DESCRIPTION	ECO NO.	NAME

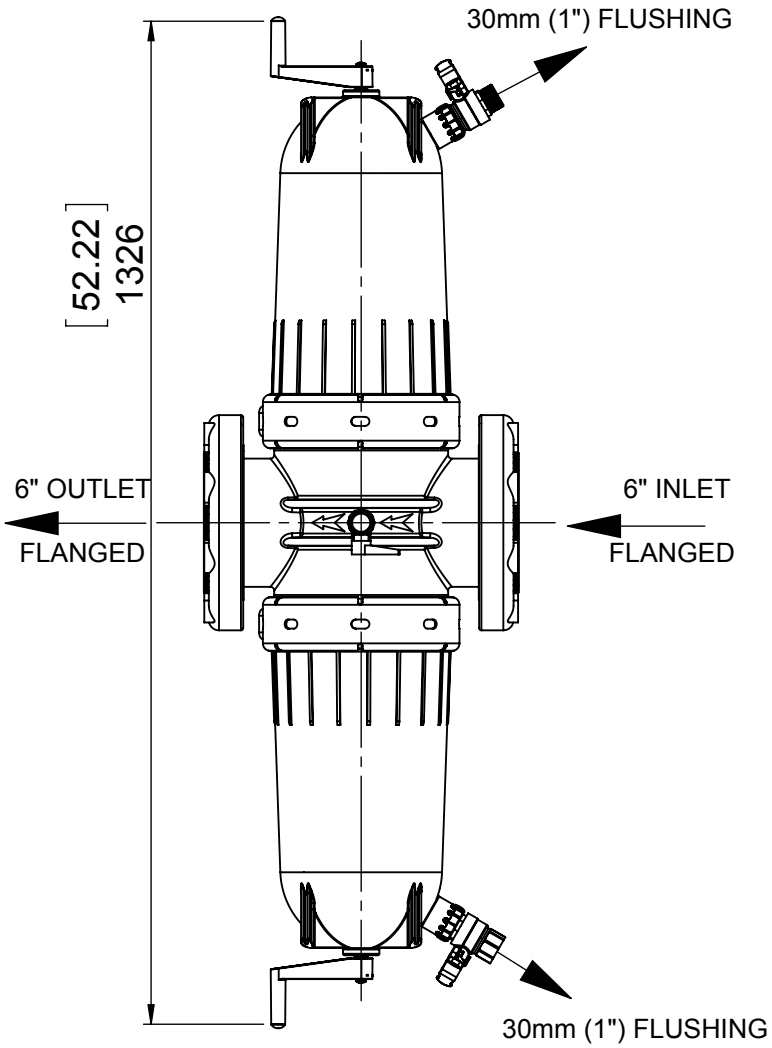

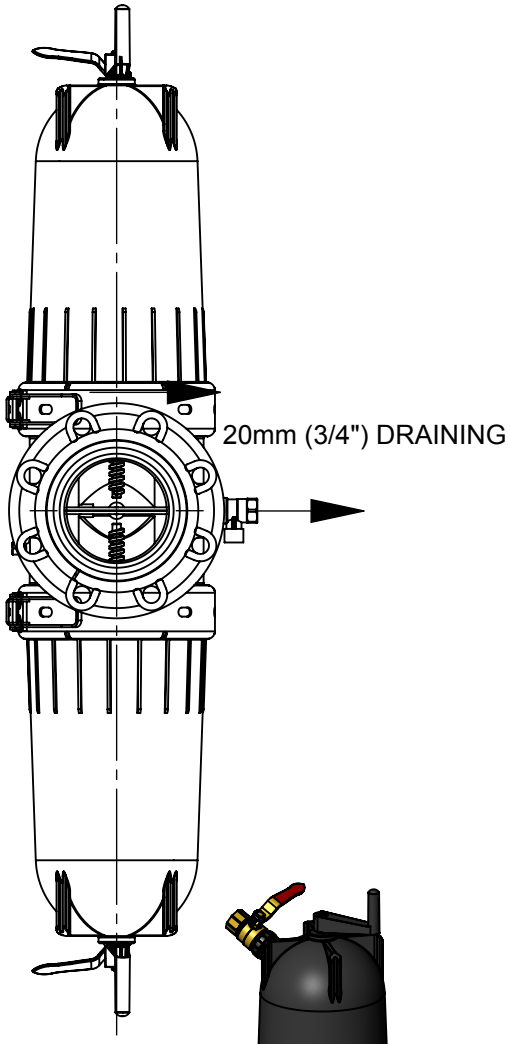

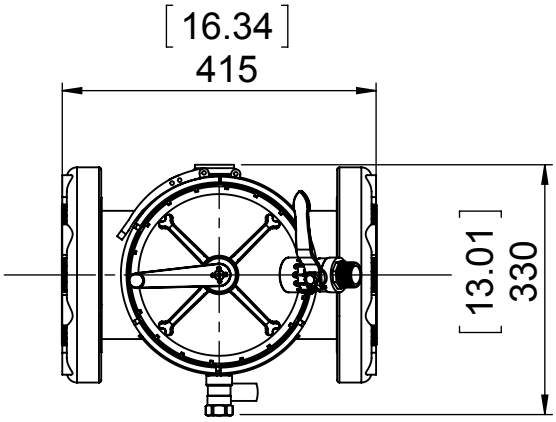

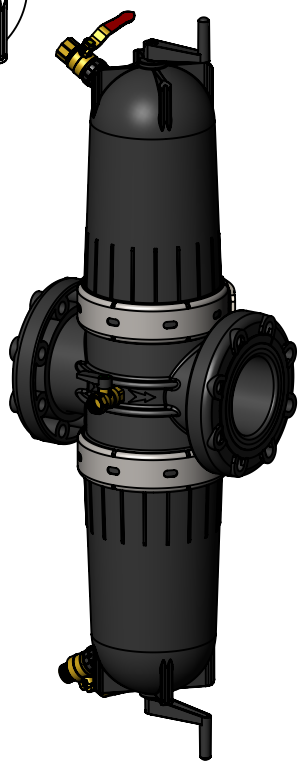

UNLESS OTHERWISE SPECIFIED:
DIMENSIONS ARE IN MILLIMETERS

PART NAME/TITLE:
6" SA SUPER LEADER SCANAWAY SEMI-AUTOMATIC SCREEN FILTER

	NAME	DATE
DRAWN	Arkadi	18.01.2018
APPROVED	Marina.K	18.01.2018

SUBJECT/PROJECT:
6"SA SUPER SCANAWAY FILTER

MATERIAL:
VARIOUS

CAT. NO.:
032003-000008

WEIGHT: N/A

DRW. NO.:
032003-000008-GA

REV.:
A

SCALE: 1:50 | SIZE: A4 | SHEET 1 OF 1

Confidential property information.
Amiad Water Systems Ltd.
reserves the rights to make changes.
All copy rights reserved to
Amiad Water Systems Ltd.

amiad WATER SYSTEMS ARKAL FILTOMAT AMIAD

File Location: T:\MASTERS – SOLID\FILTERS COMPLETE\6 INCH FILTERS\6" SEMI AUTOMATIC\ File Name:032003-000008